Major Inox

Electrical submersible drainage pump

grindex

www.grindex.com

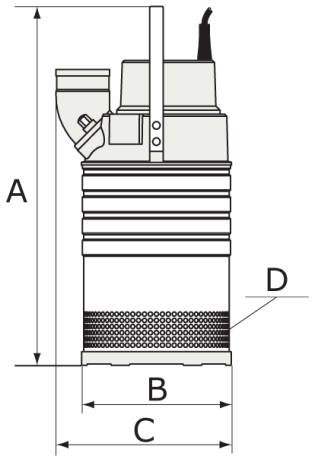

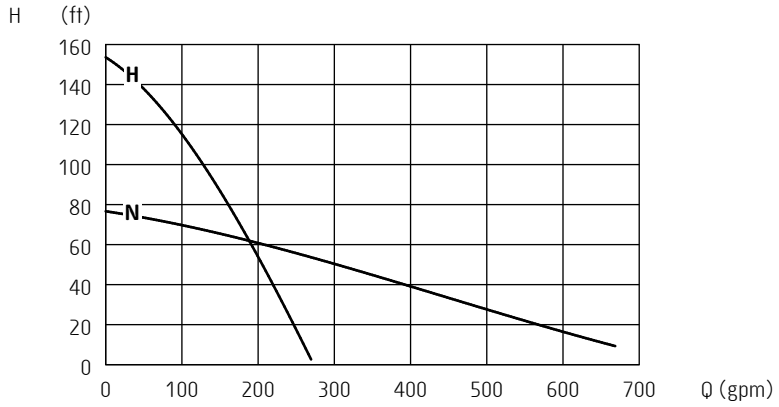

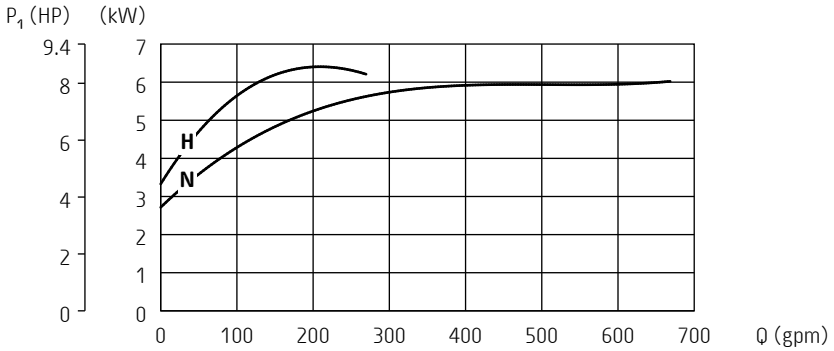

60 Hz	N	H
Discharge connection	4´´	3´´
Rated power P_2 [kW/HP]	6.7 / 9	6.7 / 9
Max. power consumption P_1 [kW]	7.6	7.6
Shaft speed [r.p.m.]	3455	3455
Rated current at 230V	21 A	21 A
Rated current at 460V	11 A	11 A
Rated current at 575V	8.6 A	8.6 A
Solids passage D	8.5 mm (0.35´´)	8.5 mm (0.35´´)
Dimensions A / B / C	665 / 280 / 330 mm	665 / 280 / 330 mm
Dimensions A / B / C	26¼ / 11 / 13´´	26¼ / 11 / 13´´
Weight	65 kg (144 lbs)	65 kg (144 lbs)

Other voltages on request

ISO 9906/A

General description
Submersible drainage pump made of stainless steel for mines, processing industries and salt-water applications

Classification
Electrical submersible pump
Protection class: IP 68

Electrical motor
Squirrel cage induction motor
Insulation class: F (IEC 85)

Motor protection
Phase sequence control, phase failure guard, temperature guard with thermal contacts in the stator (= SMART system). Air valve

Cable - SubCab 20 m (66 ft)
50 Hz 230 - 500V: 4G2.5mm²
60 Hz 230 - 575V: AWG12/4

Limitations
Max. submersion depth: 20 m (66 ft)
Max. liquid temperature: 40 °C (104 °F)
Allowed pH range: 2 - 10
Maximum liquid density: 1100 kg/m³ (68 lbs/ft³)

Shaft seals
Double mechanical shaft seals running in an oil compartment
Material lower seal: *silicon carbide - silicon carbide*
Material upper seal: *carbon - silicon carbide*

Bearings
Ball bearings with C3 clearance

Discharge connection
3-4´´ hose, Iso-G BSP or NPT

Materials
Casted parts: *Stainless steel (EN 10283-1.4412-ASTM CF-8M)*
Outer casing: *Stainless steel (EN 10088-3-1.4436-AISI 316L)*
Motor shaft: *Stainless steel (EN 10088-3-1.4460-AISI 329)*
Impeller: *Stainless steel (EN 10283-1.4412-ASTM CF-8M)*
Diffusers: *Nitrile rubber*
Screws and nuts: *Stainless steel (A4)*
O-rings: *Viton rubber*

Accessories
Zinc anodes

Distributed in the U.S.A. by:

Specifications can be changed without notice